Volume-7,Issue-4, (Apr-17)
ISSN (O) :- 2349-3585

CURTAIN FLAME IGNITION FURNACE (CFIF) FOR SINTER PLANTS

S.Meiazhagan[1], S.Karthikeyan[2], S.Kavin[3], P.Nagaraj[4]
[1,2,3,4]Department of Mechanical Engineering, SNSCE, Coimbatore, Tamilnadu

Abstract:Our project is implementation of Curtain Flame Ignition Furnace Technology. The main aim of this project is to developing the ignition furnace and eco-friendly furnace for sinter plants. As on today, sinter has become widely accepted and preferred burden material in blast furnaces. Almost, there is no blast furnace operating without sinter, nowadays. The sintering technology was developed for the treatment of the waste fines of iron ore, coke, limestone, dolomite and metallurgical wastes. The developing technology of a 'curtain flame' ignition system for sinter mix ignition. Conventionally, either horizontal fired burners or top fired or a combination of both are used for ignition of sinter mix. These burners big in size but few in number are mounted on a rectangular box type furnace. This is associated with non-uniform heating of sinter mix. In the new system, small capacity burners are installed on the roof across the sinter bed in rows. Here, the top layer of the sinter bed gets heated by the direct impingement of the flame. This has resulted in reduction in specific fuel gas consumption by more than 30% and savings in refractory consumption. And Selective Waste Gas Recirculation process which reduces 40% of sinter waste-gas volume emitted to the environment. Implementation of the system led to reduction in green house gas (GHG) emission also.

Keywords:iron ore, sintering, ignition, burner, energy, waste-gas recirculation, emission, reduction

1.INTRODUCTION

At iron and steel making works a technology has been needed, which would provide uniform ignition forignition furnaces of sintering machine, or uniform heating for heating furnaces for hot rolling over a widthof 3,000 to 4,000 mm. The former furnace is used forthe ignition of coke mixed in raw sinter material to be processed for sintering. These ignition requirements have not beenfully met by conventional burners or coaxial burners. This has driven us to create a novel type of burner that not only gives a higher temperature but also affordsa uniform temperature distribution. This burner is referred to as Line burner. This burner is capable of combusting all kinds of gases which range from high calorific gases to low calorific gases. The ignition device was developed by in cooperates the Line burner, and applied to Sintering Plants, resulting in reducing to, half in energy consumption rate, i.e. from conventionally obtained value of 14,000 down to 7,000 Kcal/t-sinter. And Selective Waste Gas Recirculation process in the sintering process which reduces 40% of sinter waste-gas volume.

2. LITERATURE SURVEY

2.1DEVELOPMENT OF CURTAILING FUEL GAS CONSUMPTIONINSINTERMACHINES(DOI:10.1504/IJETP.2012.046019)

NobuhiroFutagami,TsuguoTakehara,DaisukeOiyama"Development of curtailing fuel gas consumption in sinter machines, DOI:10.1504/IJETP.2012.046019" In an integrated steel plant, iron ore fines are agglomerated in the form of sinter, which is used as iron bearing material in blast furnace. Sintering is a process where heat is produced by combustion of solid fuels within a bed of loosely packed particles called sinter mix, so as to agglomerate it into a compact porous mass. The top surface of the mix is ignited through stationary burners. As the pallet moves forward, the air is sucked through wind boxes situated under the grate. A high temperature combustion zone is created in the charge-bed due to combustion of solid fuel of the mix. The sintering processing zone travels vertically down as forward movement of pallet takes place.

2.2 ELECTROSTATIC PRECIPITATORS FOR IRON ORE SINTER BAND (ICESP X – Australia 2006)

Qi Fengming, Yu Tianchi "Research on sinter waste gas ESP

in Wu Han steel".As the development of sintering process and growing strict regulation on particulates emission, the requirement on sinter waste gas electrostatic precipitator becomes more and more stringent. However, processes such as high degree of alkali sintering process and operating under high negative pressure have significantly affected on process ESP. In this paper, several issues are fully discussed which should be taken into account when sizing ESP's.And particulates to be treated by process ESP for a sinter in order to meet the requirement of process de-dusting for a sinter, to reach the aim of gas purification. ESP's widely used in various large-sized steel plants as designated large-scale professional dust control equipment manufacturer by metallurgical sector, having accumulated extended experience. Gas composition and dust composition for Sinter waste gas ESP have become more and more complicated along with the wide use of high alkaline degree sinter process and bigger capacity of sinter machine. This is quite adverse to dust collecting, leading to sizing difficulty of Sinter waste gas ESP. High negative pressure process brings higher demanding to ESP strength.

2.3BOTTOMFACEDLINEBURNERS(DOI:10.1504/IJETP.2012.046019)

T.S.Reddy, V.T.Selvan and A.Das "Research on Line Burners".Line burners are designed for applications where must be evenly distributed over a large area, such as ovens, kettles and air heaters. The concept involves design & mounting the small capacity of burners on the roof across the sinter bed. Group of burners are fabricated together called burner modules with common fuel gas and air combustion air connection. These burners operate on gas/air mixtures containing from 70% to over 100% of the required combustion air. The balance must be provided by secondary air. Line burners are available with pilot mounting brackets for blast pilots. Conventionally, either horizontal fired burners or top fired or a combination of both are used for ignition of sinter mix. These burners big in size but few in number are mounted on a rectangular box type furnace. These burners require separate gas/air mixing equipment. It can be operate with on-off, high-low, proportioning or fixed rate control systems within the capacity limit.

3. SINTER PLANTS:

Sinter plants agglomerate iron ore fines with other fine materials at high temperature, to create a product that can be used in a blast furnace. The final product, a sinter, is a small, irregular nodule of iron mixed with small amounts of other minerals. The process, called sintering, causes the constituent materials to fuse to make a single porous mass with little change in the chemical properties of the ingredients. The purposes of sinter are to be used converting iron into steel. Sinter plants, in combination with blast furnaces, are also used in non-ferrous smelting. About 70% of the world's primary lead production is still produced using the sinter plant blast furnace combination.

3.1 BURNER:

The two or three conventional burners are fixed in top of the sinter bed. And the ignition of the flame which is to be bottom faced to the sinters. The mode of heat transfer which takes place by radiation process. The distance between the burners are relatively large and it increases the time of the sintering process. The invention provides a slit burner for use in sintering plants of steel industry, which is capable of producing a curtain-type flame having uniform temperature at reduced fuel consumption and mounted in. An assembly of a plurality of burners on the roof of the ignition hood of sintering plants with a flame of short length, increased turndown and excess air ratios, and two-stage combustion.

4. CURTAIN FLAME IGNITION TECHNOLOGY

To improve the ignition of top layer of sinter mix and to reduce the specific gas consumption, the furnace is developed as curtain flame ignition technology. The concept involves mounting the small capacity burners on the roof across the sinter bed. To reduce the number of fuel gas and combustion air connections to each of the burners, group of burners are fabricated together called burner modules with common fuel gas and combustion air connection. The air is distributed inside the burner module for primary and secondary combustion.Primary air is sent through valves of burners for intense mixing of gas and air. The flame configuration is such that it touches the top of the sinter bed. Secondary air helps flame to form curtain shape.

ISSN:-2349-3585 |www.ijrdt.org

FIG.1 BOTTOM FACED BURNERS

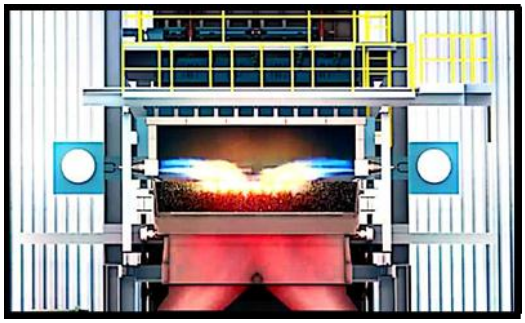

FIG.2 SIDE WALL BURNERS

4.1 LINE BURNER ARRANGEMENT

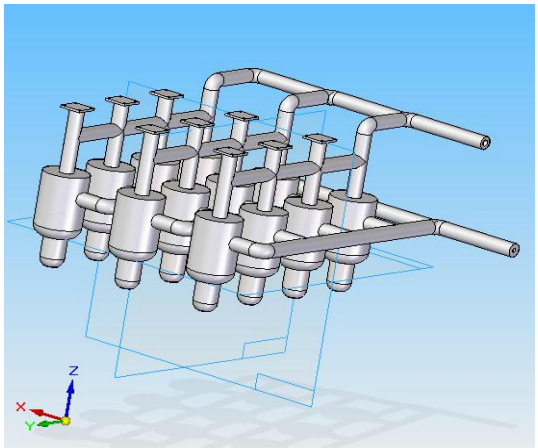

FIG.3 BURNER ARRANGEMENT

4.2 PERFORMANCE OF LINE BURNERS

Flame temperatures were measured in the direction of the burner axis at various levels which vertically locate from a burner tip at distances of 400, 600, and800 mm, respectively. It was found that the flame temperatures were considerably uniform in the direction of the burner axis and the flame lengths were proved short. The raw-mix both ends of a pallet could be heated up to a temperature high enough not to cause uneven ignition as diameter of holes grew longer.

4.3 GAS FUEL USED

Gaseous fuels occur in nature, besides being manufactured from solid and liquid fuels. Gaseous fuels due to erase and flexibility of their applications possess that they can be conveyed easily through pipelines. They have high heat contents and hence help us in having higher temperatures. They can be pre-heated by the heat of hot waste gases, thereby affecting economy in heat. Their combustion can readily by controlled for change in demand like oxidizing or reducing atmosphere, length flame, temperature, etc.

5. REFRACTORY LINING

The term “Refractory” means “Hard to Fuse”. High temperature operations are involved in almost all the industries dealing with the treatment of ores and other materials for the manufacture of metallurgical, chemical, and ceramic products.Any material can be described as a ‘refractory,’ if it can withstand the action of abrasive or corrosive solids, liquids or gases at high temperatures. The various combinations of operating conditions, in which refractories are used, make it necessary to manufacture a range of refractory materials with different properties. Refractory materials are made in varying combinations and shapes depending on their applications. General requirements of a refractory material are:

•Withstand high temperatures.

•Withstand sudden changes of temperatures.

•Withstand action of molten metal slag, glass, hot gases, etc.

•Withstand load at service conditions.

•Withstand load and abrasive forces.

•Conserve heat.

•Have low coefficient of thermal expansion.

Depending on the area of application such as boilers, furnaces, kilns, ovens etc, temperatures and atmospheres encountered different types of refractories are used.

6. SELECTIVE WASTE GAS RE-CIRCULATION

During the sintering process large quantities of waste gas are generated that contain dust and other environmental harmful pollutants ever increasing municipal demands call for new solutions that reduce both the volume and concentrations of environmental emissions to address these challenges to make the development of selective waste gas recirculation system. In conventional process one hundred percent of the waste gas exhausted from the sinter strand is directly released through the stack to the environment following the dusting. The heat energy contained in the gas is just lost to the atmosphere and

ISSN:-2349-3585 |www.ijrdt.org

relatively high concentrations of pollutants are still present in the environmental emissions. As a solution to these inherent disadvantages, the development of a unique waste gas recirculation system in which up to 40% of the waste gas can be reused in the process after the addition of small amounts of supplementary air. Only the emitted gas from selected wind boxes is recycled to the sinter strand depending on the process requirements.

S. NO.	NORMAL BURNERS	CURTAIN FLAME LINE BURNERS
1.	The burners are arranged in side of the furnace.	The burners are located on the roof across the sinter bed.
2.	Temperature distribution is non-uniform.	The intense flame touches the top of the sinter bed with uniform heating.
3.	Heat losses are so high.	Heat loss is less.
4.	Heat transfer takes place mainly through Radiation.	Heat transfer takes place through convection.
5.	Specific fuel gas Consumption is high.	Specific fuel gas consumption is less than the Normal Burner.
6.	Refractory volume is high.	Refractory volume is less compared with Normal Burner.

6.1 ESP SIZING AND DESIGN,COLLECTING EFFICIENCY

Calculating according to inlet dust content and required emission content offered by customer, the formula is:

n = 1-Co/Ci

Where,

Co - dust inlet content

Ci - dust outlet content

6.2 ELECTRODE GEOMETRY

There is a variety of electrode matches with domestic sinter waste gas ESPs such as electrode spacing 600mm, BS106 wire or star wire as discharge electrode and small C390 plate as collecting electrode. Electrode spacing 500mm, BS116 wire as discharge electrode and bigC390 plate as collecting electrode, electrode spacing 450mm, BS116 wire as discharge electrode and big C390 plate as collecting electrode, electrode spacing 450mm, ten fins wire as discharge electrode and big C390 plate as collecting electrode, which all work well.

6.3EXHAUST GAS TREATMENT THROUGH SELECTIVE CATALYTIC REDUCTION

SO_X and dioxins contained in the sinter flue gas are removed in this process by adding sodium bicarbonate and Lignite. For SO_X removal the reactions are:

$2\ NaHCO_3 \rightarrow Na_2CO_3 + CO_2 + H_2O$

$Na_2CO_3 + 2SO_2 + 1/2\ O_2 \rightarrow Na_2SO_4$

NO_X is removed by selective catalytic reduction reaction at around 200 - 450°C.

$4NO + 4NH_3 + O_2 \rightarrow 4\ N_2 + 6\ H_2O$

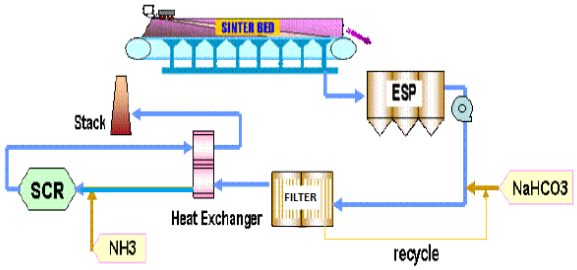

FIG.4 EXHAUST GAS TREATMENT

SCR units are add-on, flue gas treatment facilities that reduce NOX by injecting ammonia upstream of a catalyst reactor. Within the catalyst, NOX reacts with the NH3 and is reduced to N2 and water (H2O). There is a potential for NH3 to escape with the flue gas from the SCR unit.

ISSN:-2349-3585 |www.ijrdt.org

6.4 HURRICLON DEDUSTER

The aim of the hurriclon de-duster is a de-dusting facility with the objective to substantially reduce the dust content in the hot gases required for the drying and conveying. Hurriclon cyclones have been successfully applied in more than 150 installations worldwide in the cement, lime, dolomite, gypsum, timber, sugar, foundry and other similar industries with substantial operation cost savings and process efficiency improvements. The double dip tube design, high gas volumes can be handled by hurriclon with nearly half the diameter of a conventional cyclone. In many applications the desired level of gas flow volume can be achieved with a single separator where otherwise more cyclones would be necessary. This together with the smaller size of the hurriclon results in considerably fewer costs and it reduces the static weight load on the supporting structure. The amount of the re-circulated gas depends on the required gas flow in the coal mill. The variable speed drive of the fan is regulating the amount of re-circulated gas. The control loop for the fan is a constant pressure drop after the hurriclon system.

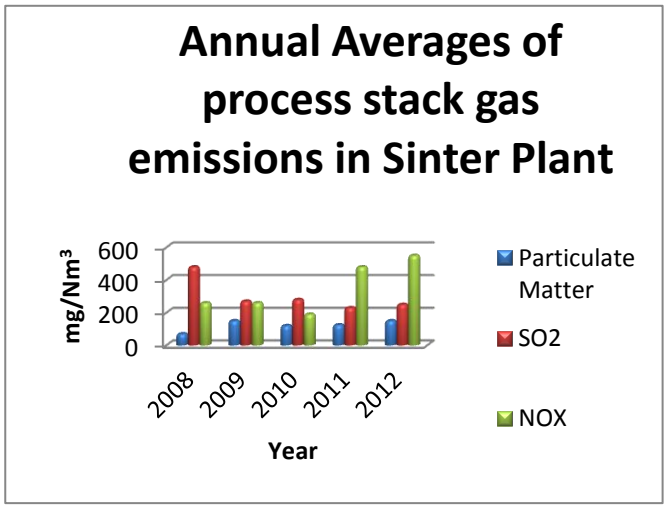

CHART 1 GAS EMISSIONS IN SINTER PLANT

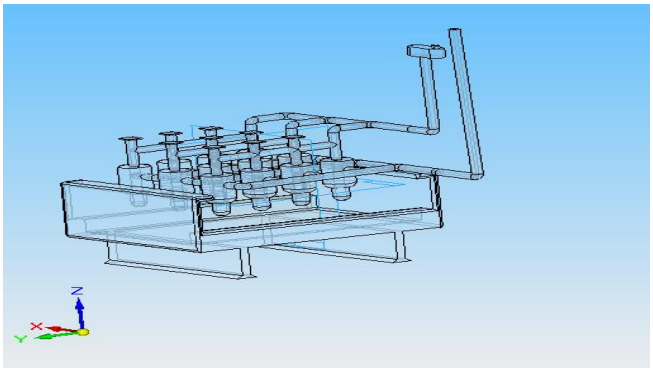

FIG.5 ASSEMBLED VIEW

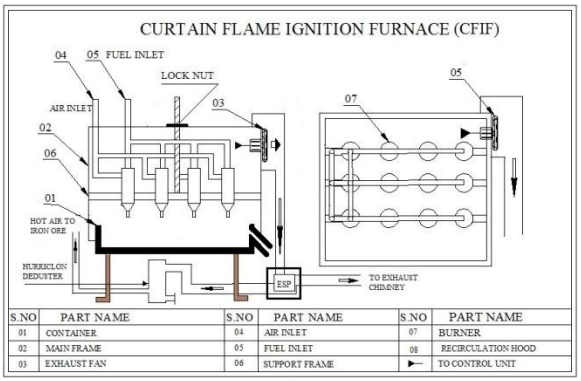

FIG.6 DRAFTING OF ASSEMBLY

7. BENEFITS OF OUR PROJECT

7.1 REDUCTION IN FUEL CONSUMPTION AND COX EMISSIONS

Implementation of Curtain Flame Ignition Technology in Sinter Plants of SAIL has resulted in substantial reduction in CO emissions. Already, Verified Emission Reductions (VERs) of 246,682 [72,285 for Sinter Plant-1 of Rourkela Steel Plant and another 59,567 VERs for Sinter Plant of Bokaro Steel Plant under finalization] have been accrued. With regard to other units, emission reduction certification is under application stage. It is expected that VER's of around 156,570 per year will be certified.

7.2 BENEFITS

Overall benefits obtained by curtain flame ignition technology are:

•Reduction in over all specific fuel gas consumption in sinter plants of SAIL by 37%.

•Reduction in certified GHG emission of 246,682 ton of CO till 2 December 2008 and expected 156,570 ton of CO per year for implementation 2 of new technology in SAIL plants.

•Gas flow to main burners can be cut down during machine idle period as pilot burners were installed.

•Apart from savings in fuel gas consumption and reduction in CO 2 emissions. Auto ignition takes place when the machine starts with the help of pilot burners.

•Overheating of pallet side plates was minimized as the length of hot zone is reduced and gas flow was cut-off during idle period.

•Improvement in productivity by 5 – 10 %.

•Reduction in furnace start up time from 90 to 15 minutes.

•Uniform temperature distribution of ±10 C across the width of the bed resulting in better sinter quality.

ISSN:-2349-3585 |www.ijrdt.org

8. CONCLUSION

As compared with conventional burners, higher ignition temperature and better temperature uniformity have been obtained with considerable reduction 50% of ignition energy consumption rate, i.e., from 14,000down to 7,000 Kcal/t-sinter, through the employment of a low calorific gas such as mixed gas (1,800 Kcal/Nm3). The construction of a ignition furnace is lighter and more compact ignition device with a volume as small as 1/10that of the conventional has been realized. A novel, highly efficient ignition device has thus been completed, greatly contributing to the sintering operation with a drastic reduction of energy consumption rate. The development of a unique waste gas recirculation system is which reduces 40% of the waste gas and it can be reused.

9. REFERENCES

[1]NAVONMESHbyV.T.Selvan,T.S.Reddy,A.Das,DOI://10.1504/IJETP.2012.046019.

[2]DEVELOPMENT OF CURTAIN WALL BURNER by Kawaski Steel Crop in 2008.

[3]http://steelworld.com/newsletter/apr11/feature0411.pdf to reduce the GHG in BF.

[4]http://mmmmconferences.com/conference2014/G2-RDCIS.pdf for fuel efficiency and consumption.

[5] Electrostatic Precipitators for Iron ore sinter band, by Qi Fengming, Yu Tianchi “Research on sinter waste gas ESP in Wu Han steel”.

[6] Cleaner Technology For Sinter Plants, integrated iron and steel plants by A Center Pollution Control Board in India Organization.

[7] Material Selection For Fuel Fired Crucible Furnace by Oluwole.O, Nigeria.

[8]http://www.sail.co.in/iiscorourkelasteelplantforestablishment of iron ore fines in sintering.